HEKLA

Barrel Sauna

Assembly & User Manual

PLEASE READ ENTIRE MANUAL THROUGH BEFORE PROCEEDING WITH INSTALLATION.

LOCATION

Think carefully about where you want to locate the sauna. After you have completed the installation the sauna won't be able to be moved due to its size and weight. The sauna will need to be in a location that can have power access installed. Confirm the electrical supply with your electrician before building the sauna.

SAFETY & OPERATION

Read all health and safety instructions. If unsure about your health concerns, consult with your physician prior to use. If you feel light-headed or heat exhaustion during session, exit the sauna immediately.

1. Read and follow all instructions carefully.
2. When installing and using the electrical equipment, basic safety precautions should always be followed.
3. To reduce the risk of injury, do not allow children to use the sauna unless they are closely supervised at all times.
4. Do not use the sauna immediately following strenuous exercise. Wait at least 30 minutes to allow the body to cool down completely.
5. Excessive temperature has a high potential for causing fetal damage during the early months of pregnancy. Pregnant or possibly pregnant women should contact their physician prior to using the sauna.
6. Hypothermia Danger: Prolonged exposure to hot air will induce hypothermia. Hypothermia occurs when the internal temperature of the body reaches a level several degrees above the normal body temperature of 37°C. While hypothermia has many health benefits, it is important not to allow your body's core temperature to rise above 39.4°C. Symptoms of excessive hypothermia include dizziness, lethargy, drowsiness, and fainting.
7. The use of alcohol, drugs, or medications prior to or during the sauna session may lead to unconsciousness.
8. Persons suffering from obesity or with a medical history of heart disease, low or high blood pressure, circulatory system problems, or diabetes should consult a physician prior to using the sauna.
9. Persons using medications should consult a physician before using the sauna since some medications may induce drowsiness while others may affect heart rate, blood pressure, and circulation.
10. Never sleep inside the sauna while the unit is in full operation.
11. DO NOT use any type of cleaning agents on the interior of the sauna.
12. DO NOT stack or store any object on top of or inside the sauna.
13. If power supply cord becomes damaged it must immediately be replaced by a service technician. Please contact your local dealer for assistance.
14. DO NOT use the unit during an electrical storm, as there is a remote risk of shock.
15. Altering or tampering of any electrical connections on the power supply will void the manufacturer'swarranty.
16. Dry your hands before handling electrical controls. Never unplug the power cord or adjust the controls with wet hands or when you have wet bare feet. A danger of electrical shock exists.
17. DO NOT attempt any repair without consulting the manufacturer first. Unauthorized repair attempts will void the manufacturer'swarranty.
18. All natural wood articles have variations in the color, grain, and irregularities such as knots, and fine cracks. These characteristics are a part of the natural beauty of the wood, and in no way should be considered defective

WOOD & EXPECTATIONS

This Sauna is designed for outdoor use.

The lumber is naturally resistant to the elements. Rain and sun will not damage the wood, although natural weathering and coloring of the wood will occur over time.

The wood is a natural material, so expect there to be slight imperfections and knots, this gives the sauna its beautiful rustic look and feel. Because of the knots and being softwood, the staves will tend to bend out of line on their own. This is completely normal and will be self corrected as the Sauna is built.

Properly assembled, you should not experience water dripping into the sauna. However, you will experience water seepage, especially on the top and sides of the sauna. This is because of the porous characteristics of the wood and due to the ball-and-socket profile design of the staves.

Water seepage WILL NOT hurt the sauna and in most cases will dry quickly in the hot, dry environment when the sauna is in use. If you wish to keep your sauna completely dry at all times, then you should place it under a covering or structure with a roof.
Light sanding will help to alleviate water stains.

PARTS LIST

Installation Parts:
Barrel Sauna - 210 Nero &
Barrel Sauna - 210 Thermo Spruce &
Barrel Sauna - 210 Solid Back Wall Nero &
Barrel Sauna - 210 Solid Back Wall Thermo Spruce

Type	Part Name	Qty.	Description
Regular Stave	Side Stave-Left	40	Including 1 additional pair
	Side Stave-Right	40	Including 1 additional pair
	Top Stave A/Top Stave B/Top Stave C	3	-
	Bottom Stave	1	-
	Small moon shape corner staves-Left	1	-
	Small moon shape corner staves-Right	1	-
	Top Stave D	1	-
	Top Stave E	2	-
Front Panel	Front panel-Left	1	-
	Front panel-Middle	1	-
	Front panel-Right	1	-
	Door Handle	1	-
	Latch	1	-
Back Panel	Glass window or Back panel - Upper	1	Depending on the model purchased, you will receive either the Glass Window Frame or the Back Panel (Upper).
	Back panel-lower	1	-
Component	Inside bench	2	-
	Outside bench	2	-
	Inside bench support	8	-
	Inside platform	2	-
	Outside platform	1	-
	Cradle base	1	-
	Backrest	2	-
	Cable trunking	2	-
	Front and rear sealing parts	2	Front sealing parts*9,Rear Sealing Parts*9,total 2 sets
	Bench Support Cleat	8	Inside*6,Outside*2
	Triangular water-blocking strip	2	-

**NOTE: The 'Label' column in the above table corresponds to the following page diagram which identifies the pieces for your reference. The physical items are not numbered. Some pieces however (such as the 'starting bottom stave') are physically stickered with their descriptive part name.*

Screws

Barrel Sauna - 210 Nero &
Barrel Sauna - 210 Thermo Spruce &
Barrel Sauna - 210 Solid Back Wall Nero &
Barrel Sauna - 210 Solid Back Wall Thermo Spruce

Screw	Size	Required QTY.	Packed QTY	Description
Steel Band	6680*30*0.8mm(+20, -0)	3	3	For Steel band
Bolt	⌀ 10*150	3	3	
Nux	M10	6	6	
Steel Flat Washer	φ10	6	6	
Rubber mallet	/	1	1	Installation tool
Stainless steel vent cover	#53*65	6	7	For vent,Back panel inside&outside*4,front panel outside*2
Stainless steel vent cover	#53*60	1	2	Bottom stave*1
Sharp head screws	5*50	52	64	Side stave*40,Cradle base*12
Sharp head screws	5*70	6	9	Front panel&Back panel connection
Sharp head screws	3*16	2	3	Door Latch
Flat head screws	M6*75	1	2	Door handle
Wood plug cap	Outsideφ18*Insideφ13.2*Height 7	1	2	
Wood plug cap	Outsideφ12.6*Insideφ10*Height 6.2	54	66	Front and rear sealing parts*54
Wood dowel	φ8*40	40	52	Front and rear sealing parts*40
Sharp head screws	4*40	290	310	Floor panel*6,Triangular water-blocking strip*14,Inside&outside benches*16,Backrest*8,Bench support*16,,Bench Support Cleat*16,Side stave*130,Front&rear sealing part*54,Spare*30
Sharp head screws	3*30	8	11	LED light cable trunking*8
Shingle underlay	1.15*87m	6.6	6.6	For roof waterproofing
Black paint-mending pen	/	1	1	For maintenance
Bitumen Roof Shingle A	1000*325	39	47	Bitumen Roof Shingle Installation
Bitumen Roof Shingle B	333*325	13	16	
Bitumen Roof Shingle C	167*325	13	16	
Bitumen Roof Shingle D4	50*325	13	16	
Bitumen Roof Shingle F7	550*325	13	16	
Sharp head screws	3*14	273	332	

PARTS LIST

Installation Parts:
Barrel Sauna - 250 Nero &
Barrel Sauna - 250 Thermo Spruce &
Barrel Sauna - 250 Solid Back Wall Nero &
Barrel Sauna - 250 Solid Back Wall Thermo Spruce

Type	Part Name	Qty.	Description
Regular Stave	Side Stave-Left	40	Including 1 additional pair
	Side Stave-Right	40	Including 1 additional pair
	Top Stave A/Top Stave B/Top Stave C	3	
	Bottom Stave	1	
	Small moon shape corner staves-Left	1	
	Small moon shape corner staves-Right	1	
	Top Stave D	1	
	Top Stave E	2	
Front Panel	Front panel-Left	1	
	Front panel-Middle	1	
	Front panel-Right	1	
	Door Handle	1	
	Latch	1	
Back Panel	Glass window or Back panel - Upper	1	Depending on the model purchased, you will receive either the Glass Window Frame or the Back Panel (Upper).
	Back panel-lower	1	
Component	Inside bench	2	
	Outside bench	2	
	Inside bench support	10	
	Inside platform	2	
	Outside platform	1	
	Cradle base	1	
	Backrest	2	
	Cable trunking	2	
	Bench Support Cleat	10	Inside*8,Outside*2
	Front and rear sealing parts	2	Front sealing parts*9,Rear Sealing Parts*9,total 2 sets
	Triangular water-blocking strip	2	

**NOTE: The 'Label' column in the above table corresponds to the following page diagram which identifies the pieces for your reference. The physical items are not numbered. Some pieces however (such as the 'starting bottom stave') are physically stickered with their descriptive part name.*

Screws

Barrel Sauna - 250 Nero &
Barrel Sauna - 250 Thermo Spruce &
Barrel Sauna - 250 Solid Back Wall Nero &
Barrel Sauna - 250 Solid Back Wall Thermo Spruce

Screw	Size	Required QTY.	Packed QTY	Description
Steel Band	6680*30*0.8mm(+20, -0)	3	3	For Steel band
Bolt	⌀ 10*150	3	3	
Nux	M10	6	6	
Steel Flat Washer	φ10	6	6	
Rubber mallet	/	1	1	Installation tool
Stainless steel vent cover	#53*65	6	7	For vent,Back panel inside&outside*4,front panel outside*2
Stainless steel vent cover	#53*60	1	2	Bottom stave*1
Sharp head screws	5*50	52	64	Side stave*40,Cradle base*12
Sharp head screws	5*70	6	9	Front panel&Back panel connection
Sharp head screws	3*16	2	3	Door Latch
Flat head screws	M6*75	1	2	Door handle
Wood plug cap	Outsideφ18*Insideφ13.2*Height 7	1	2	
Wood plug cap	Outsideφ12.6*Insideφ10*Height 6.2	54	66	Front and rear sealing parts*54
Wood dowel	φ8*40	54	66	Front and rear sealing parts*40,Glass window frame*14
Connect plate	80*16MM	5	5	Glass window frame
Sharp head screws	3*14	20	26	
Sharp head screws	4*40	320	340	Floor panel*6,Triangular water-blocking strip*16,Inside&outside benches*16,Backrest*10,Bench support*20,Bench Support Cleat*20,Side stave*130,Front&rear sealing part*54,Glass frame*19,Spare*29
Sharp head screws	3*30	8	11	LED light cable trunking*8
Fabric	1.15*87m	9.9	9.9	For roof waterproofing
Black paint-mending pen	/	1	1	For maintenance
Bitumen Roof Shingle A	1000*325	41	49	Bitumen Roof Shingle Installation
Bitumen Roof Shingle A8	960*325	11	14	
Bitumen Roof Shingle E6	460*325	13	16	
Bitumen Roof Shingle E	500*325	11	14	

PARTS LABELED

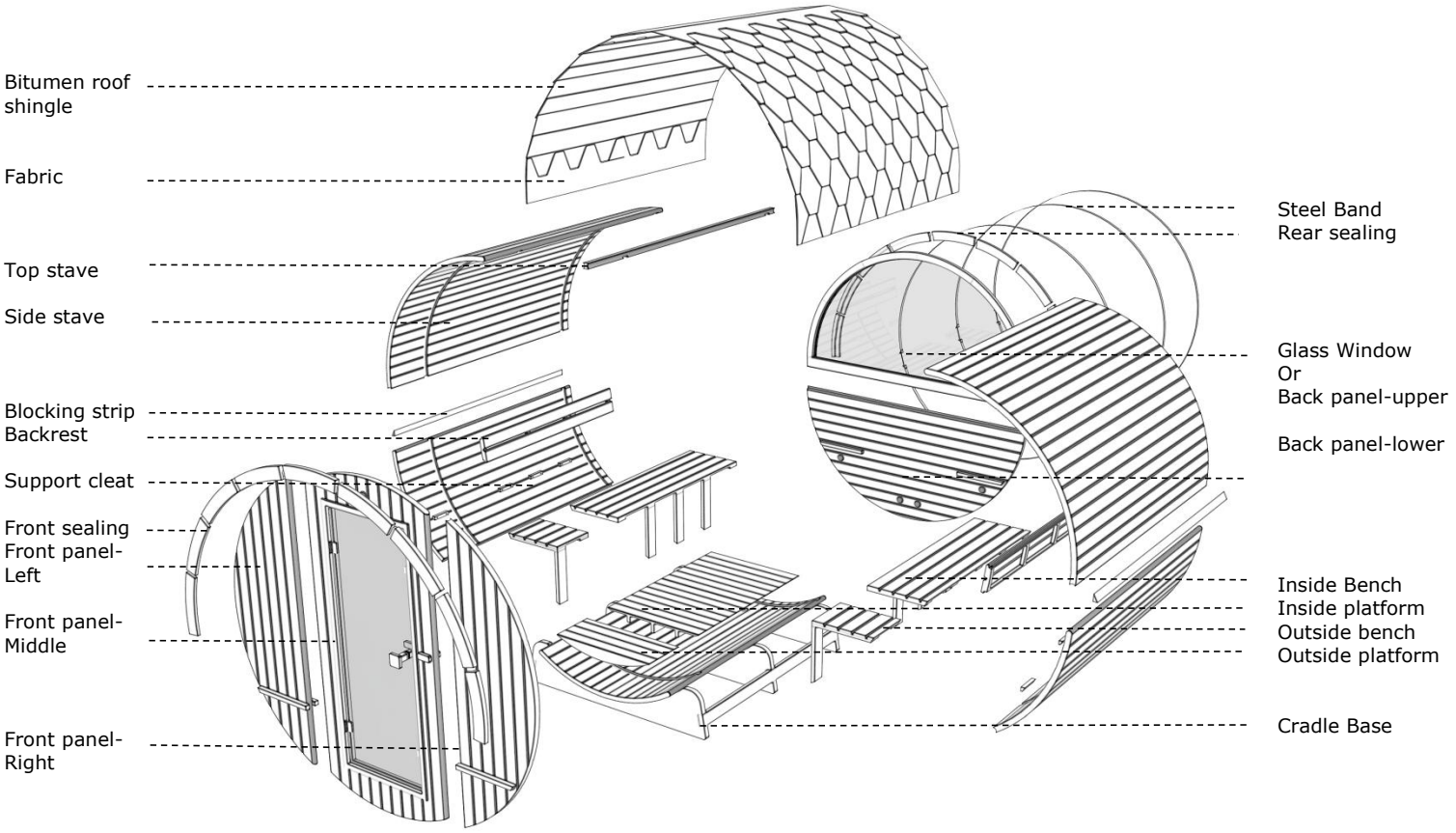

NOTE: This manual illustrates the Half Panoramic Back Wall version. If your sauna is supplied with a Solid Back Wall, the assembly procedure is the same unless otherwise stated.

FOUNDATION

An outdoor sauna can weigh up to 600kg once assembled, therefor requires a sturdy foundation. This needs to be a flat, level surface that supports the entire weight of the sauna and users. We recommend using either a concrete slab or a pile foundation. The base of the sauna must not rest upon anything that will degrade the quality of the timber (soil, grass etc.)

Your foundation should have some form of drainage or contour, allowing storm water to drain away from the base of the sauna. If you find after creating the foundation that your sauna base does not sit level, use packing shims or similar to correct to level positioning.

Once your outdoor sauna has been assembled, it becomes near impossible to move great distances. Therefor assembling the sauna in its desired location, or very close to, it strongly advised. Moving your assembled sauna can potentially cause damage or alter its performance, which may void the warranty. Refer to the below table for the assembled measurements of your outdoor sauna. Use these as a reference when planning your foundation.

Item	Width (mm)	Length (mm)	Height (mm)
Barrel 210	2210	2090	2330
Barrel 250	2210	2500	2330

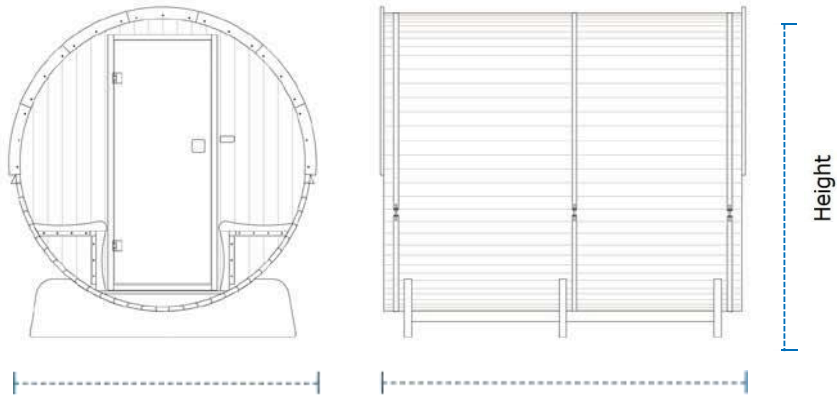

TOOLS

Tools required include screw drivers set, power drill set, measuring tape, level, mallet, socket set.

Screw Drivers Set

Power Drill Set

Measuring Tape

Level

Mallet

Socket Set

Adjustable Wrench

OPTIONAL

Ruler / Square

STAPLER ASSISTS WITH ATTACHING BITUMEN ROOFING

1 Place cradles one prepared surface.The base for sauna cradles must be levelved and sturdy. Ensuring the two cradle base joints are properly aligned and connected. Position the bottom stave in the center of the cradle bases.

The bottom stave have one round vent hole pre-drilled. Fit the bottom stave into the centre of the cradle bases using the provided dowels (The bottom stave with the round vent indicates the rear side of the sauna.)

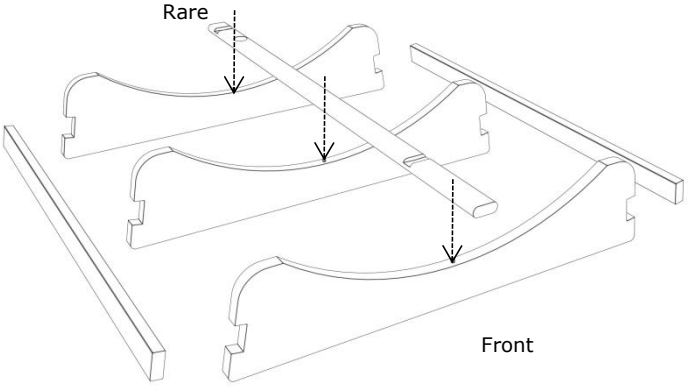

2 Use the 12pcs.5x50 screws to fasten the cradle base jo ints through the pre-
drilled holes into the cradle bases. Tighten the screws s ecurely to ensure the cradle base joints is firmly fixed i n position. Measure diagonally from corner to corner. M easurements "'a"' and "b" should be equal.

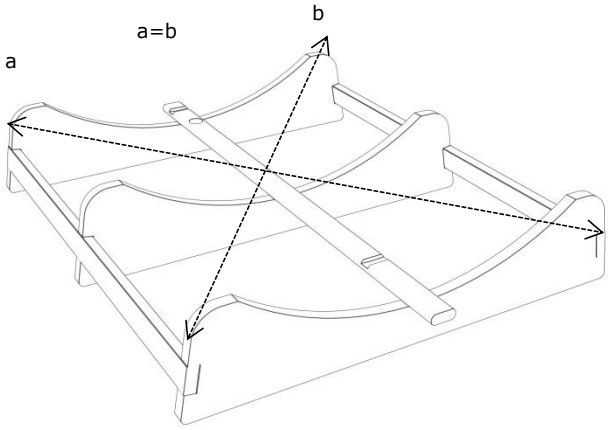

3 Starting from the center stave, install the remaining staves alternately on both sides. Lay 2 staves on each side of the mounted center stave. Using a rubber mallet, gently tap each stave into place until the ends are flush and the tongue-and-groove joints are fully engaged. Ensure there are no gaps between adjacent staves.

Hold the staves firmly in position and secure every second stave with the supplied 40pcs.5×50 mm screws. Repeat the same process on the opposite side. Continue installing the staves alternately on both sides.

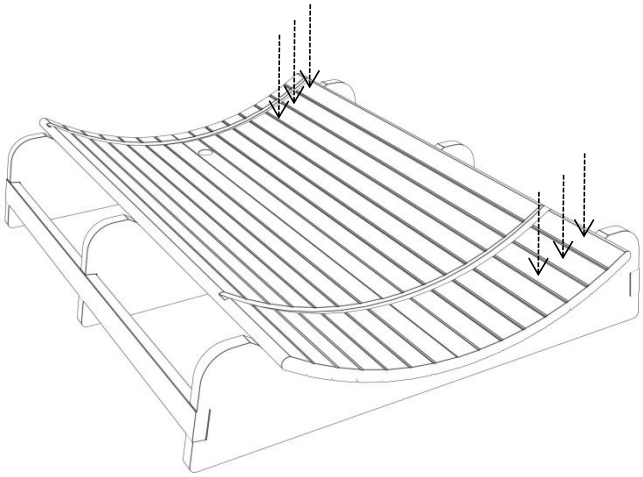

4 Locate the three front panel segments and place them on a clean, flat work surface with the glass facing upward.

Using the tongue - and -groove joints, slide each side panel into the front panel - middle. Ensure all edges are flush and that the bench support cleats are positioned at the bottom

Secure the three panels together using 5 × 70 mm screws, installing screws at each pre-drilled joint.

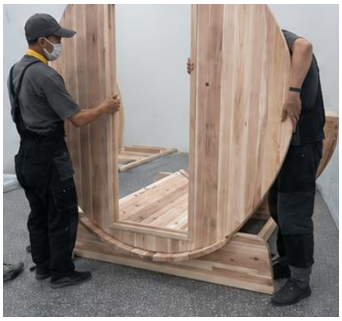

5 Gently lift the front panel into place. While one person holds it in place, level the front wall with the base structure (use the door frame to help and NOT the bench supports). Secure the levelled front wall in place using a 4 × 40mm screw on both sides. Continue to support this wall as wind can blow it over.

6 ⚠ CAUTION:

The front panel - middle contains glass. Always handle the panel with care and place it on a clean, soft surface to avoid scratching or damaging the glass. Do not apply pressure directly to the glass.

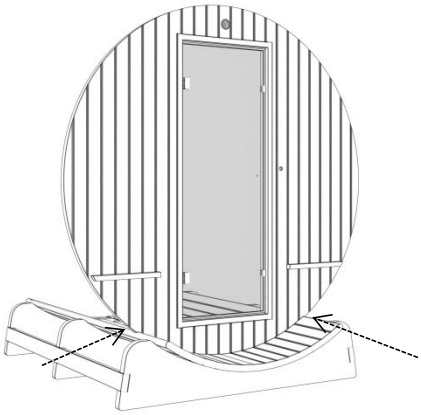

7 Locate the back panerl - lower and position it into place.The Bench Support Cleats must face inside the sauna. The smooth side of the rear wall faces outside. Make sure the pre-drilled vent holes are central with the centre bottom stave and level it before securing with the 4×40mm screws.

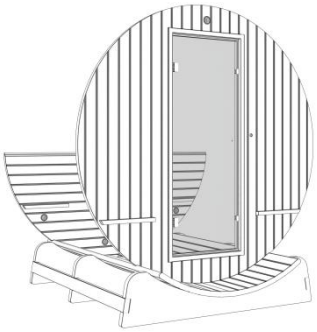

8 Install the side staves onto either side of the barrel. Use a rubber mallet to gently tighten up the staves as you go. Use 4×40mm screws to fix the staves one-by-one to the front & back panels. Please note: Now the staves are screwed into the front and back wall, the screw position for adding these staves should no longer be in the centre of the stave. The correct positioning for the screw should be on the top edge as per the below image. This allows for some movement when adding additional staves, particularly the top stave.

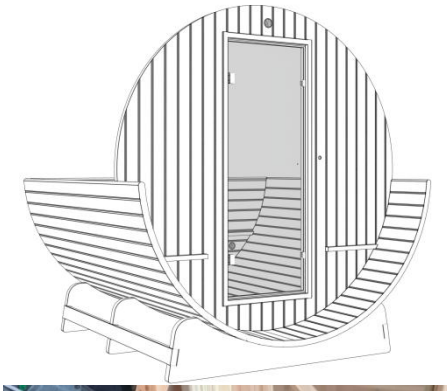

MODEL SELECTION
The following installation steps differ depending on your sauna model. Please continue with the appropriate step below.

Barrel 210 / Barrel 210 Solid Back Wall → Step 9 → Steps 14 - 18 → Step 21
Barrel 250 Solid Back Wall → Step 10 → Steps 14 - 18 → Step 21
Barrel 250 → Step 11

⚠ CAUTION:
If installing the Back Panel – Glass Window, handle the panel carefully. Do not apply pressure to the glass.

9 **Barrel 210/Barrel 210 Solid Back Wall:** Position the Back Panel – Upper / Back Panel – Glass Window onto the Back Panel – Lower.Align the tongue-and-groove joints and carefully lower the panel until it is fully seated. Ensure the joint is tight and all edges are flush.Use the pre-drilled holes to secure the panel with 2pcs. 5 × 70 mm screws, installing one screw on each side.

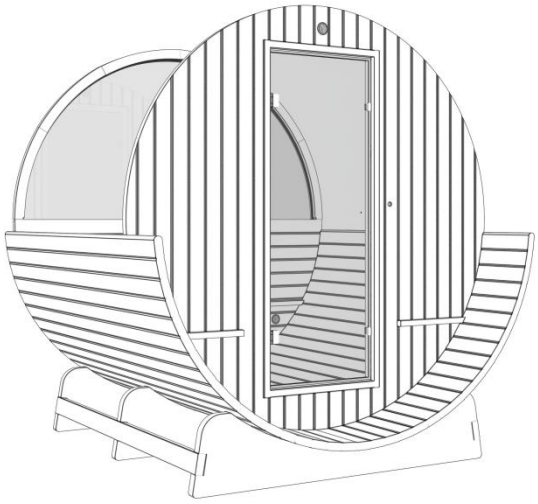

11 **Barrel 250:** Install the half glass panel using the Glass Window components first. After the half glass panel is securely installed, place the complete Glass Window assembly onto the Back Panel – Lower and align it properly before fastening. For detailed installation steps, please refer to the following section.

10 **Barrel 250:** Secure the Back Panel – Upper Top Part to the Back Panel – Upper using 2pcs. 5 × 70 mm screws. Align the pre-drilled holes and fasten one screw on each side to secure the connection.

Position the Back Panel – Upper onto the Back Panel – Lower.Align the tongue-and-groove joints and carefully lower the panel the panel until it is fully seated. Ensure the joint is tight and all edges are flush. Use the pre-drilled holes to secure the panel with 2pcs. 5 × 70 mm screws, installing one screw on each side.

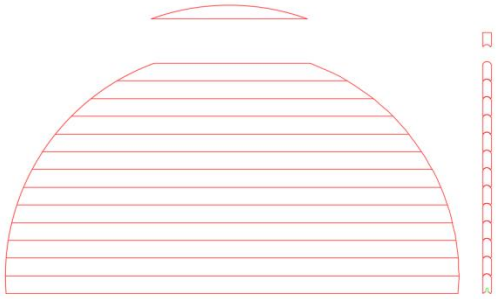

12 Align and connect the glass window wooden frame using wood dowels. Secure the connection pieces with 3 x 14mm screws.

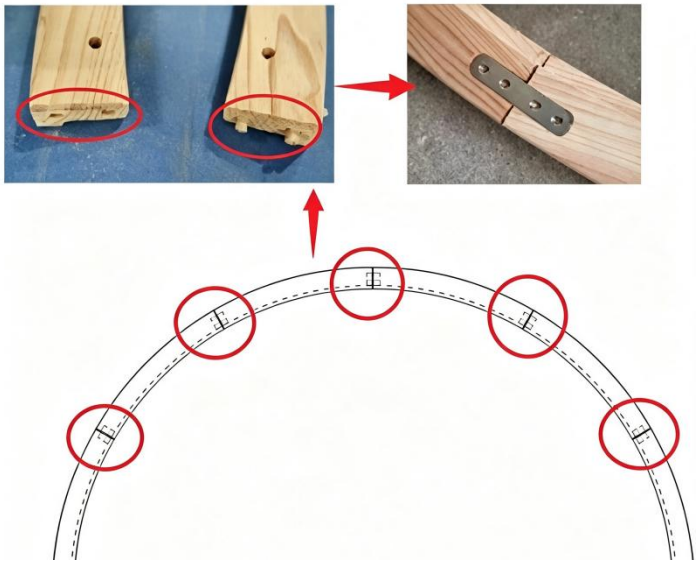

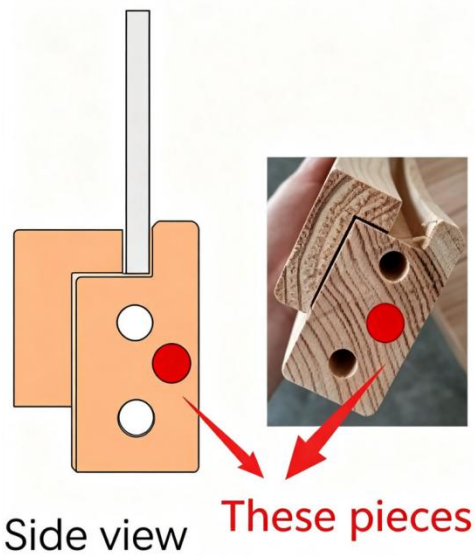

13 Install the Glass Window wooden frame onto the half wooden Back Panel. Align the frame properly and secure the connection using 2pcs. 4 × 40 mm screws. Should need a person to hold on the glass window wooden frame

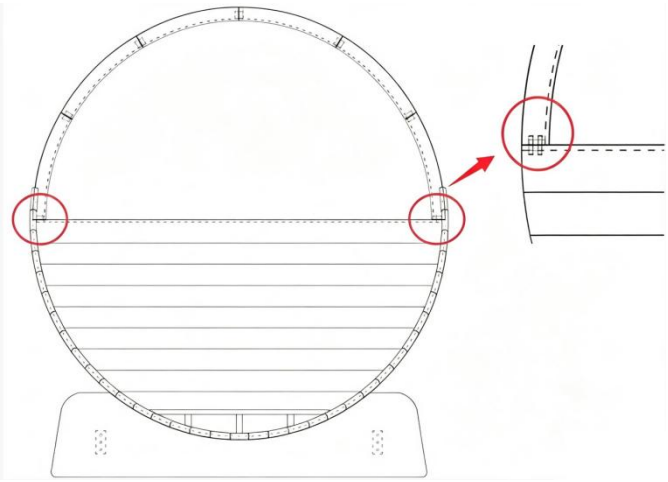

14 Install the balance staves (FollowingNo.24-No.39)on each side forwards the top **BUT DO NOT WITH SCREWS!!!!**

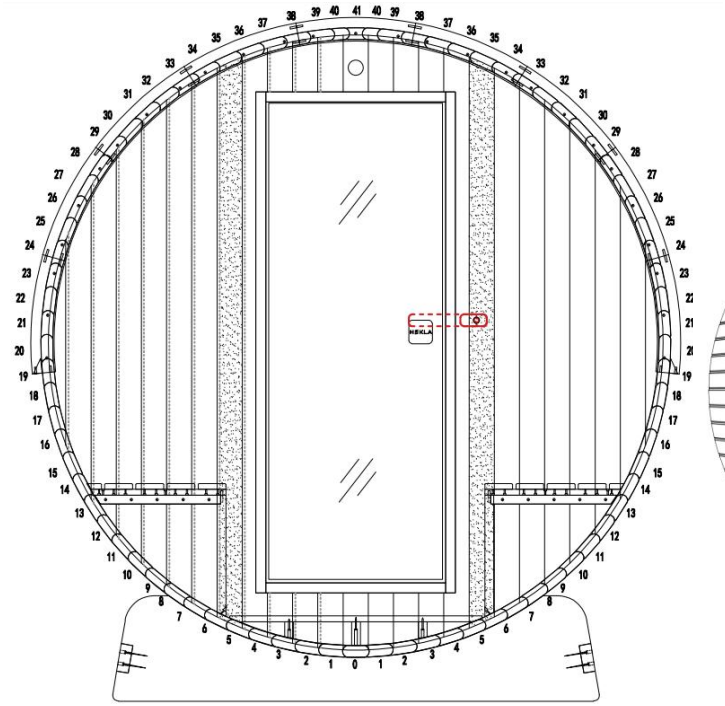

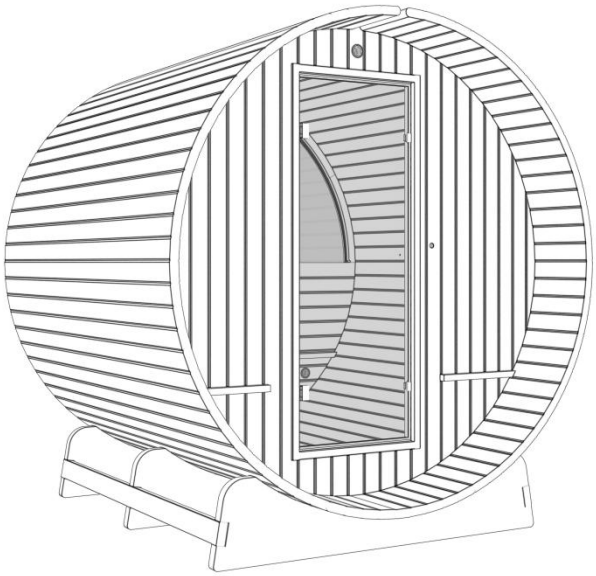

15 At this point our final gap between the staves can vary, this is why we provide several sized final staves(Top Stave & Small moon shape corner staves) to account for this. You will need to tap the loose top staves outwards and measure the gap to gain a better idea on what top centre staves you require. Repeat this on the back and take note of the measurements.

16 If the front and rear dimensions are different, you will need to take the measurement between the two staves, for example our front dimension was 85mm and our rear was 95mm, so we used the D-Stave and a top centre stave to create a 90mm wide stave to fill the gap.

17 Secure the two staves together using the 3*30mm screws

18 These staves should only need a light tap to lock into position. Making it too tight might result in the front and rear wall segments to separate. Minor gaps between staves are OK as we will install metal bands later which will put it all tight.

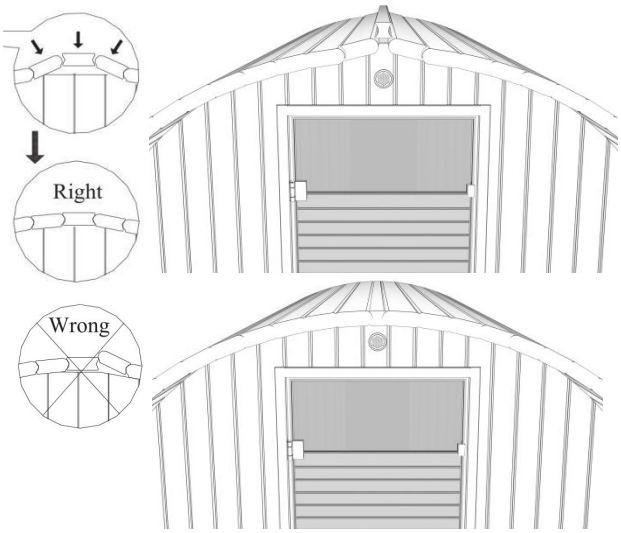

19 Install the glass window:

1)With two people, carefully lift and position the glass window into the bottom groove of the wooden frame rear wall.Make sure one person holds the glass window securely in position while the other installs the straight wooden strip at the bottom.Fasten the straight wooden strip using 4 × 40 mm screws.

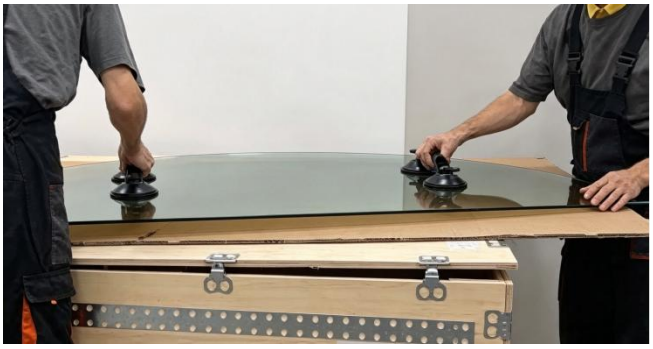

20 Locate the 7 external glass wooden frame. Position the first one at the top in the center of the glass. Secure this in place using the 4*40mm screws. Then continue to install 3 more evenly on either side.

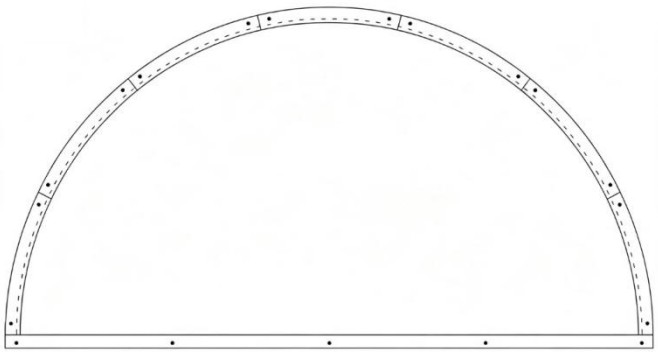

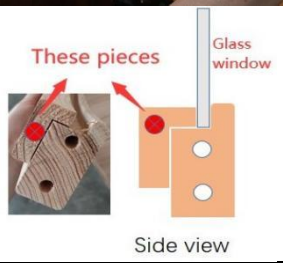

21 Locate your steel bands and remove the blue protective tape. Once you have removed the blue tape, separate the 3 long bands and the 3 short bands. Feed a short band under the base.

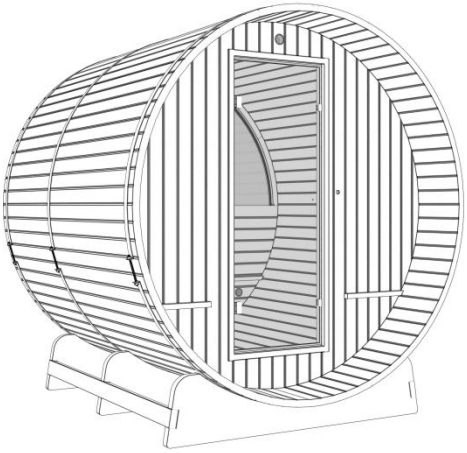

23 Once all 3 bands are in place and bolted together, adjust the heights of the six bolts so they are level on both sides. Tighten them evenly using a tube socket and ring spanner. While the bands are being tightened, gently tap the top loose staves with the rubber hammer to help them lock into place.

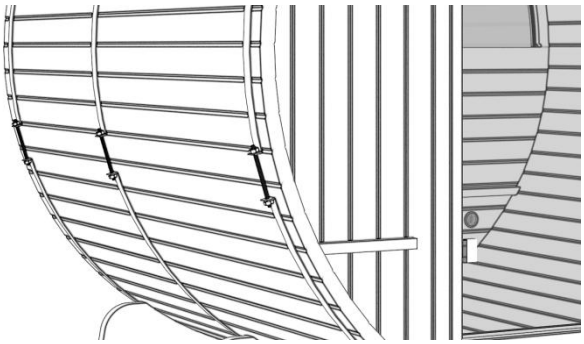

22 Then lay a long band over the top in line with the short band. Using the bolts provided, join the two ends of each band together but do not tighten yet. Repeat this on the rear and in the middle. The bands should remain on the outside of the rear base support.

24 Count to the 16th stave up from the bottom stave (bottom centre stave not counted) on each side of the sauna and pencil a mark for the drip edge to be secured. Fasten each Triangular water-blocking strip with 4 x 40mm screws across the length of the sauna on each side. The drip edge should sit level with the top edge of the 19th stave.

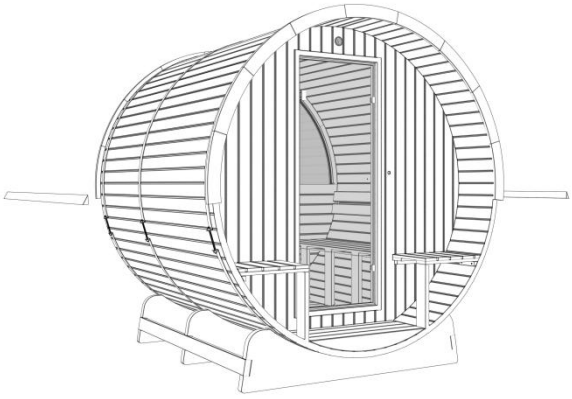

25 Install the vent guards in the back wall, internal floor and front wall. Gently tap these in using a flat surface to prevent denting.

TIP: You may need to bend out the small nodes of each vent using a flathead screwdriver or chisel.

27 Position segment along the drip edge, making sure the flat part of the segment is flush with the bottom of the drip edge. Secure these using a staple gun. BE SURE TO STAPLE & SCREW AT THE TOP OF THE RIDGE SO IT WILL BE COVERED BY THE NEXT LAYER. Use 3 -4 of the provided 3x14mm screws to secure each segment in place.

26 Install the shingles underlay.

Step 1
Lay out the shingles underlay on both sides of sauna.
Leave underlay a couple of cm over the edge
Fix it with some nails or staples. Each for corners and in between.

Step 2
Lay out the shingles underlay on the roof.
Leave underlay a couple of cm over the edge.

Step 3
Underlay should go over the lower part of underlay.
Fix it with some nails or staples. Each for corners and in between.

Using a stapler, fix underlay on the end of the board.
Cut excess part of underlay if necessary.
Staple down underlay to board ends.

Cut off the excess part of the underlay along with the of the boards.

Locate the packs of bitumen roof tiles and arrange them into their shapes.

NOTE: Please refer to the separate Bitumen Roof Tile Installation Diagram included in the screws kit for detailed installation instructions.

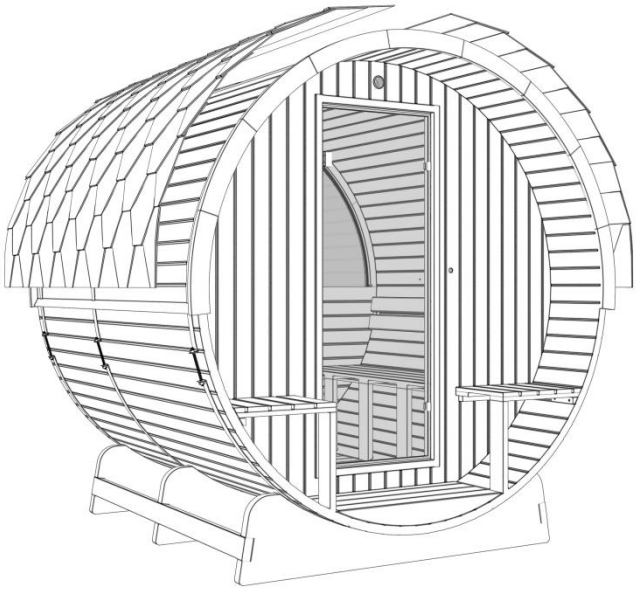

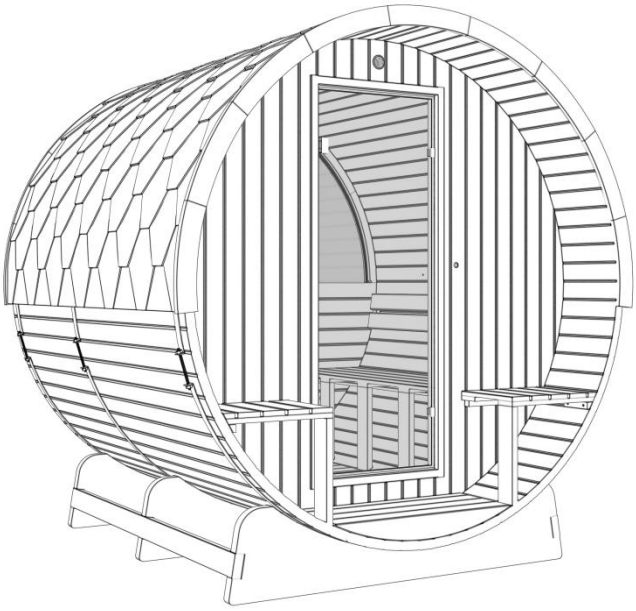

29 Once the first layer is secure, position a other segment next and secure in place. Make sure to always start at the front edge and to make sure the segments are flush.

Then continue to install the other segments using staples to hold the segment in place and then the 3x 14mm screws to securely mount it. Remember to staple and screw at the top.

30 Before installing the last centre top layer of bitumen apply a generous layer of sealant to the underside of the tile and carefully position it into place. DO NOT STAPLE OR SC REW THIS TILE. Firmly press down on the areas where seal ant was applied, creating a waterproof seal.

Continue to follow these steps and lay each layer on top of the previous.Follow the layer guide for each side of the sauna.

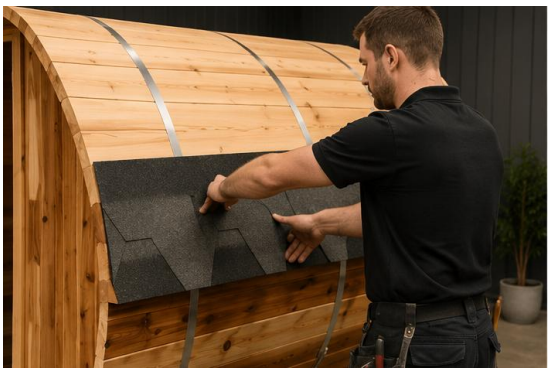

32 Locate the decorative boards and begin to install these, start from the top centre and work your way down. The last 2 boards on either side may extrude over the drip edge. If this is the case, hold the decorative board in place, mark it and trim the drip edge & bitumen tile as required. Repeat this at the back

33 Locate the inside and outsidefloor platform and position these in place. Ensure these are level and pushed as far forward towards the front wall as possible, this is to leave breathing room under the heater. Secure these in place using the 4*40mm screws.

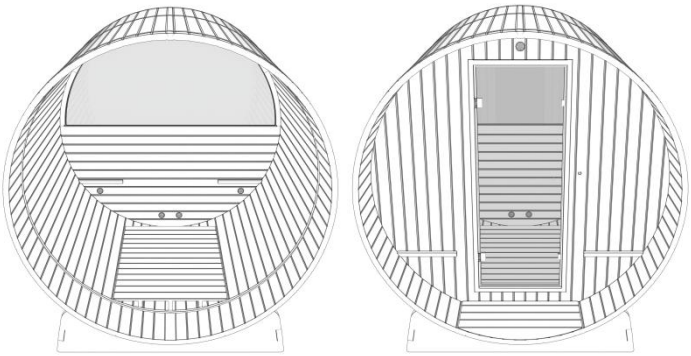

34 Position the bench support cleat on the side panel. The bottom of the cleat should be 382 mm above the floor panel. Check that the cleat is level with the front and rear bench support cleats to ensure the bench board will sit flat.Mark the fixing position with a pencil.

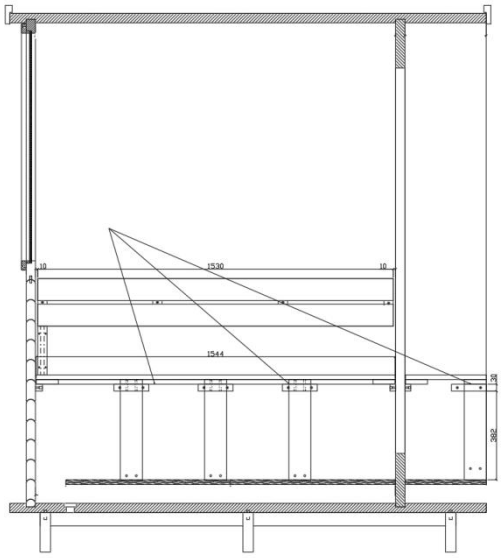

35 Fasten the inside and outside bench support cleat using 4 × 40 mm screws through the pre-drilled holes in the cleat.

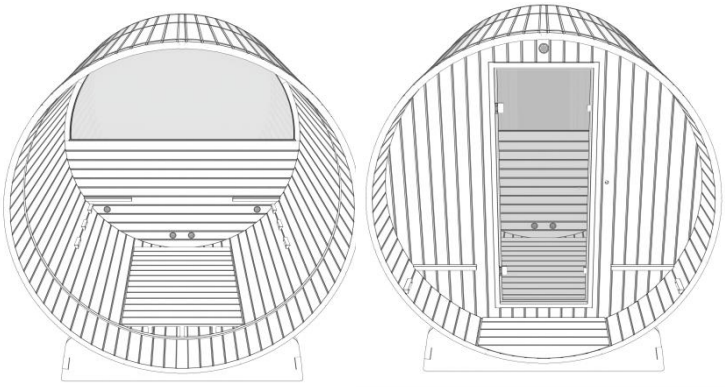

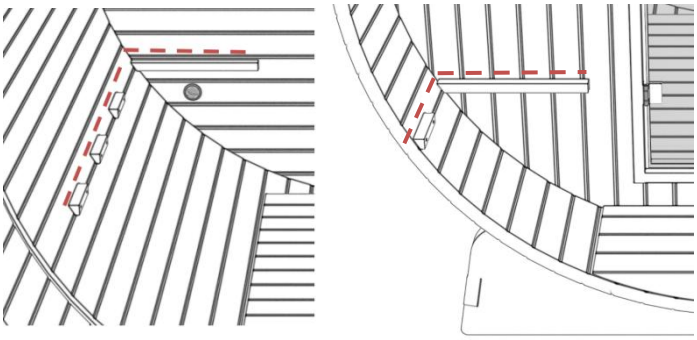

36 Place the bench supports inside the sauna and position the benches on top of the supports.

Align the tenon joints on the bench supports with the pre-cut slots on the benches, then push the parts together until they are properly fitted.

After confirming the bench position, secure the benches to the supports using 4×40mm screws.

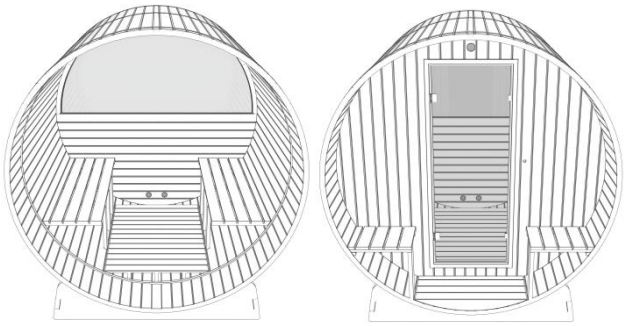

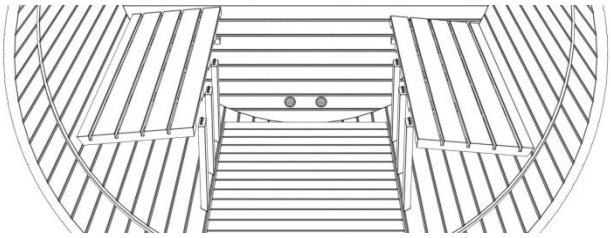

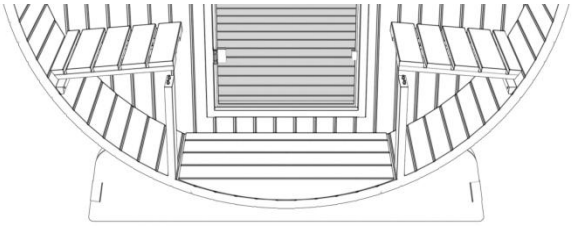

37 Locate the backrest and position it into place. Centralize it and secure it on each end using the 4*40mm screws. And connect the LED light strip.

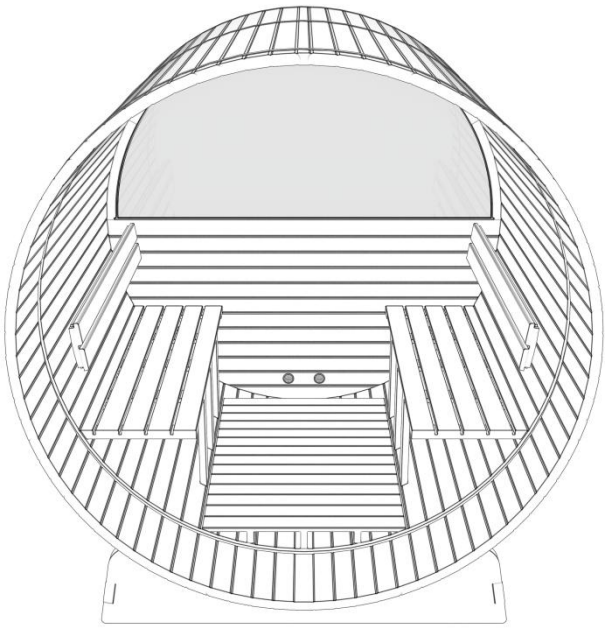

38 Position the front and back sealing parts correctly against the side panels.
Secure both sealing parts using 4×40mm screws.

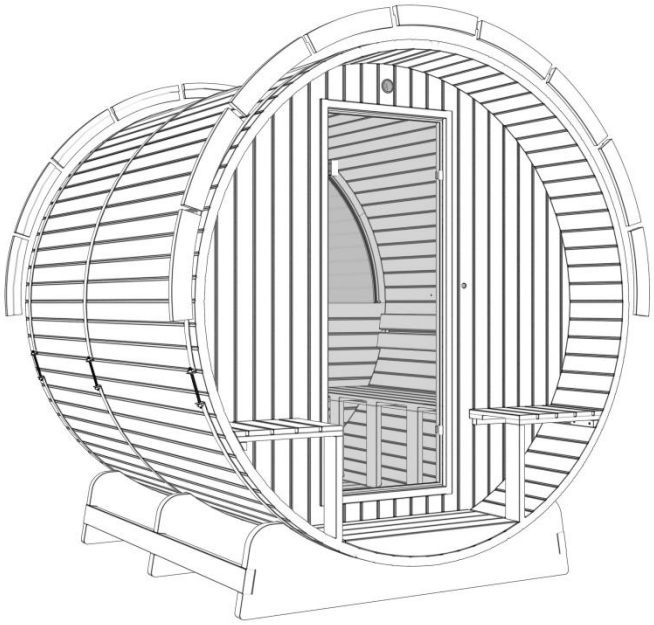

39 Install the door handle using the 5x70mm screw. Be sure to put the oiled handle on the outside.

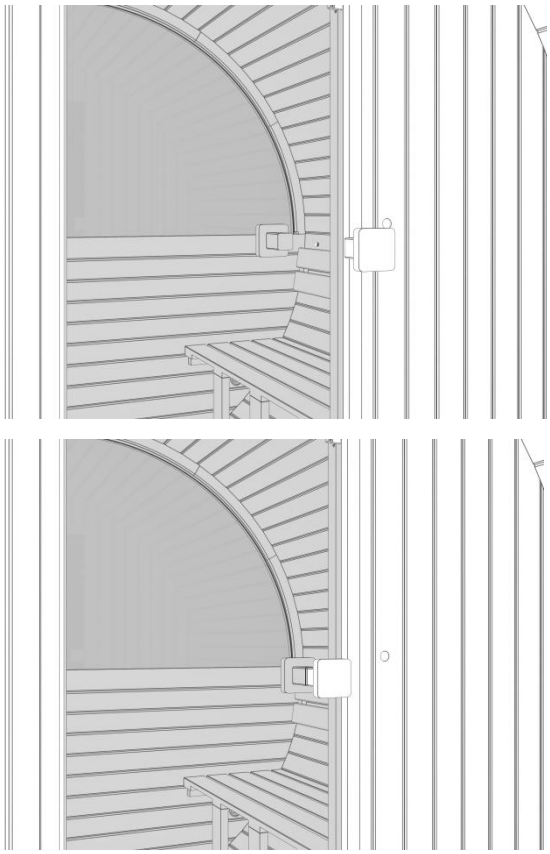

40 Install the door latch on the inside of the sauna and secure it using 3 x 16mm screw

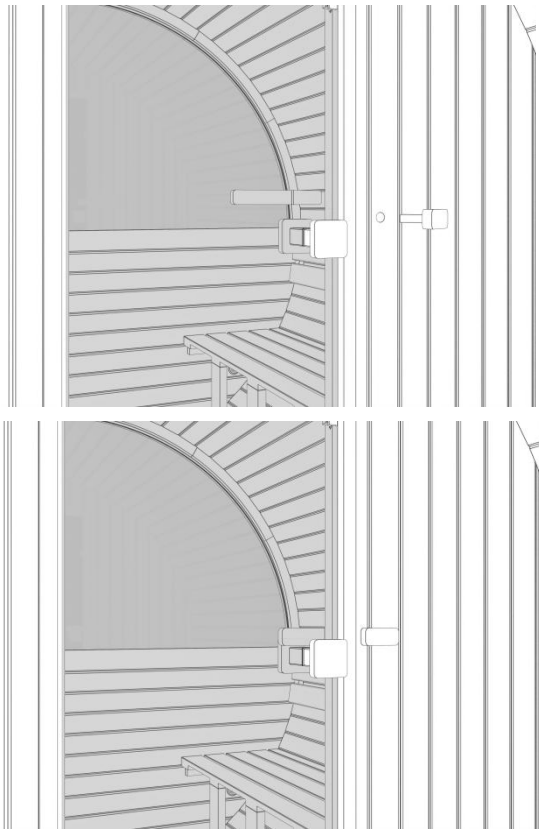

5. SAUNA WARRANTY

1. Two-year limited warranty on electrical components, and one-year limited warranty on wooden components.

2. Sauna replacement parts come with a limited warranty. We warrant its products to be free of defects in material and workmanship. Parts, that become defective within the warranty period, will be repaired except for damage due to negligence, abuse, misuse, misapplication, unauthorized modifications, improper installation, or normal wear and tear.

3. Labor costs associated with the disassembly and reassembly of the unit are not covered under this policy. We will not be responsible for labor costs of the routine maintenance,adjustments or alterations to the calibration of the electrical devices.

4. All parts claimed to be defective must be shipped to us with freight prepaid. The repaired or replaced product will be returned to the sender on a freight-collect basis. When returning the product to us, it must be accompanied by the sales receipt or other proof of purchase date, along with the sender's name, mailing address, daytime telephone number, and any additional information pertinent to the claim.

5. This warranty is granted solely to the original purchaser and shall be void upon transfer of ownership. This warranty shall not apply to any product or component used for industrial, rental, club ,or commercial purpose. This warranty shall not apply to any claims arising from the misuse, neglect, accident, abuse, or improper installation, including, but not limited to, exposure to fire, excessive heat, and or other hazards of nature. Under no circumstances will shall the manufacturer be liable for any special or consequential damages arising from the use of the product, components, or any parts attached, or installed with it thereto. Nor shall the company be liable for injury to any person, or for any claims for damages arising form the use,installation,or servicing of the product. The purchaser is responsible for providing ensuring that adequate access to the equipment so that is provided to facilitate the performance of any necessary service. The purchaser must establish provide proof of the purchase date through a dated sales slip, invoice or deliver receipt, the date of purchase. All costs for removing and reinstalling associated with the removal and re-installation of the sauna, including the freight charges to and from customer, shall be at the customer's expense.

6. Regardless of the warranty card being returned within the specified time period, there shall be no warranties or obligations: express or implied hereunder, specifically excluding any implied warranty of merchantability or fitness for a particular purpose, other than specifically described herein. no liability shall accrue to our except as set forth herein.

* The warranty for our saunas is strictly limited to one year and applies exclusively to residential use. Any commercial application, outdoor installation, improper usage, or continuous operation exceeding 3,000 hours will render the warranty void and may result in safety risks or compromised performance.

HEKLA

Superior House,
Broombank Park,
Chesterfield, UK
S41 9RT
heklasaunas.com